System Block Diagram v1.00

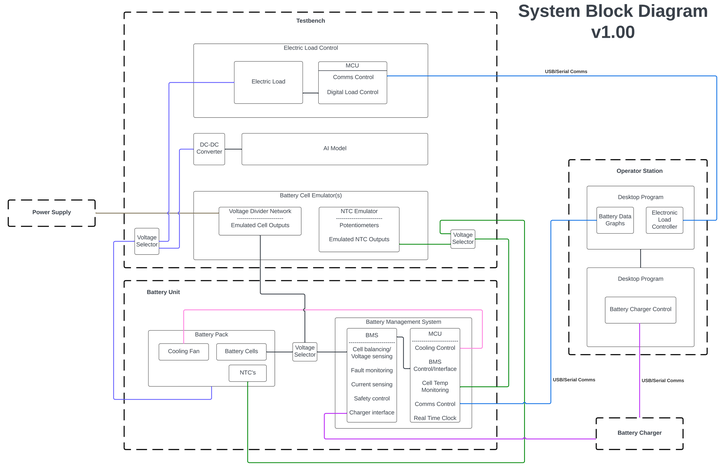

System Block Diagram v0.01

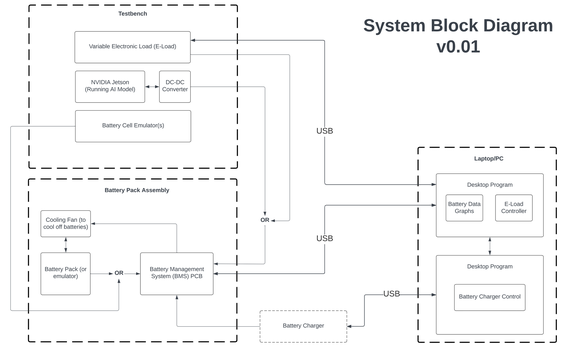

NOTES:
- Ask for TA feedback on system blk diagram
- Ask for TA feedback on project setup/idea
- Ask about using NVIDIA Jetson for running AI

TODO next monday:
- Select sensors and show TA the list of sensors using (shunt, NTC's, etc.)
- Finish all blk diagrams

eLoad Block Diagram

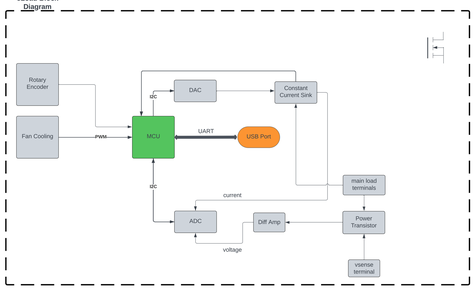

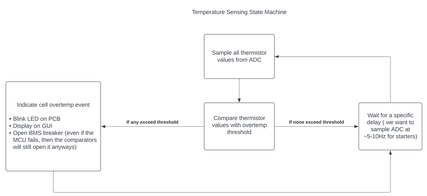

Cell info:
Name - Molicel P42A
Capacity - 4.24h
Nominal voltage - 3.6V
Datasheet: https://www.molicel.com/wp-content/uploads/INR21700P42A-V3-80092.pdf

Pack info:
Cell Config - 10s1p
Nominal pack voltage - 36V
Pack capacity (nominal) - 151.2 Wh

SYMBOL KEY:

== signal net

== signal harness, represents a collection of N separate signal wires

== bidirectional signal

== indicates signal path/flow, not necessarily representing a unidirectional signal

BMS Firmware Stuff Google Doc
https://docs.google.com/document/d/1wG3oafMZ81ORbfaRZo1HE9QLOOK_aKIsCYbgiQoxh8o/edit?usp=sharing

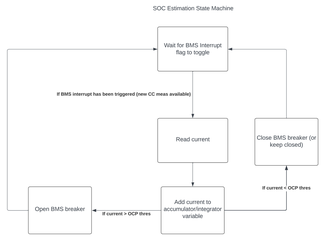

We want the MCU to be powered all the time. We can only read fault status of BMS if MCU is powered on. Need MCU to have power even if breaker is open

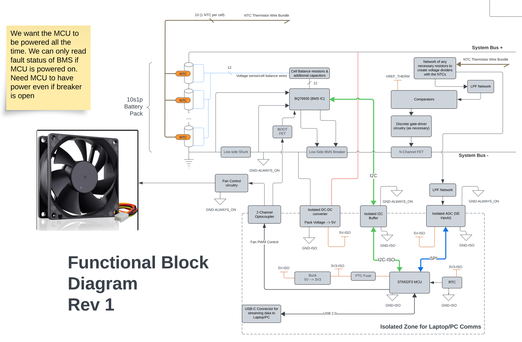

Functional Block Diagram Rev 1
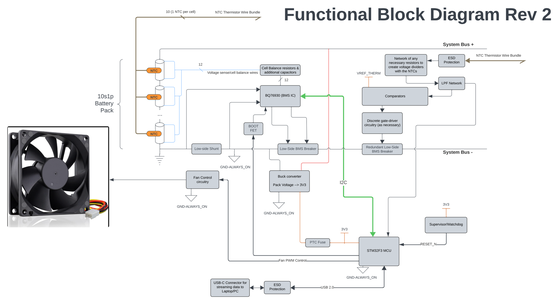
Functional Block Diagram Rev 2